KONTEYNER VİDASI

CONTAINER SCREW — CONTAINES SCHRAUBE

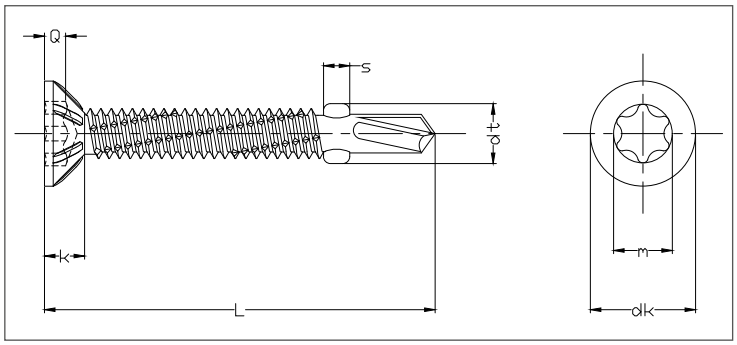

ISO	UNI	DIN
-	-	-
Mekanik Özellikler - Toleranslar *Mechanical Properties - Tolerances* *Mechanische Eigenschaften - Toleranzen*		-

TEKNiK BiLGiLER — TECHNICAL INFORMATIONS — TECHNISCHE INFORMATION

d		5,5	6,3
d	max	5,00	6,35
	min	5,32	6,17
dk	max	10,80	12,40
	min	10,37	11,97
k	~	3,40	3,80
s	max	3,70	4,00
dt	~	7,50	8,30
Nº	Torx Drv No Torx Recess No	T25	T30
m	~	4,52	5,63
Soket Derinliği Q Penetration Depth Q	max	2,30	2,70
	min	1,90	2,30

l	min	max	Weight/ ağırlık gr/p	
60	58,50	61,50	11,02	
65	63,50	66,50	11,85	
70	68,50	71,50	12,68	
80	78,50	81,50	14,66	