CRP VİDASI

CRP SCREW — CRP SCHRAUBE

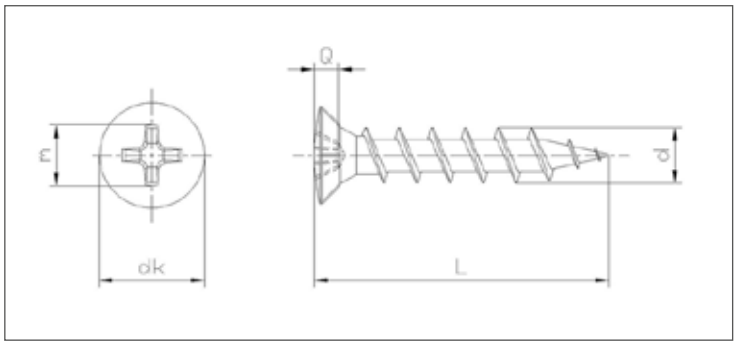

ISO	UNI	DIN
-	-	-
Mekanik Özellikler - Toleranslar *Mechanical Properties - Tolerances* *Mechanische Eigenschaften - Toleranzen*		-

TEKNiK BiLGiLER — TECHNICAL INFORMATIONS — TECHNISCHE INFORMATION

d		D					
d	max	5,00					
	min	4,00					
dk	max	7,30					
	min	7,00					
Nº	PH Drv No Phillips Recess No	2,00					
m	~	4,50					
Soket Derinliği Q Penetration Depth Q	max	2,60					
	min	2,20					

d			4,2					
l	min	max	Weight/ ağırlık gr/p					
25	21,50	22,50	1,38					
32	24,50	25,50	1,66					
38	37,50	38,50	1,72					