ALTIKÖŞE SOMUN

HEXAGON NUT | **SECHSKANTMUTTERN**

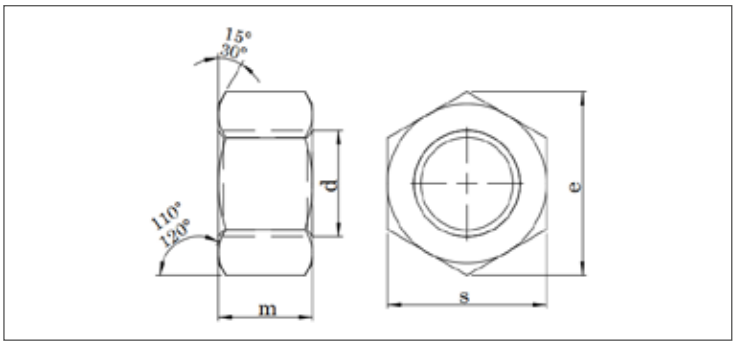

DIN EN ISO	UNI	DIN
4032	5588	934
Mekanik Özellikler - Toleranslar *Mechanical Properties - Tolerances* *Mechanische Eigenschaften - Toleranzen*		DIN 267-4 UNI 3740-4 ISO 4759-1

TEKNiK BiLGiLER | **TECHNICAL INFORMATIONS** | **TECHNISCHE INFORMATION**

d	s min	s max	m min	m max	e min	pitch	gr
M2	3,820	4,000	1,350	1,600	4,320	0,400	0,140
M2,5	4,820	5,000	1,750	2,000	5,450	0,450	0,280
M3	5,320	5,500	2,150	2,400	6,010	0,500	38,000
M4	6,780	7,000	2,900	3,200	7,660	0,700	0,810
M5	7,780	8,000	3,700	4,000	8,790	0,800	1,230
M6	9,780	10,000	4,700	5,000	11,050	1,000	2,500
M7	10,730	11,000	5,200	5,500	12,120	1,000	3,120
M8	12,730	13,000	6,140	6,500	14,380	1,250	5,200
M10	16,730	17,000	7,640	8,000	18,900	1,500	11,600
M12	18,670	19,000	9,640	10,000	21,100	1,750	17,300
M14	21,670	22,000	10,300	11,000	24,490	2,000	25,000
M16	23,670	24,000	12,300	13,000	26,750	2,000	33,300
M18	26,160	27,000	14,300	15,000	29,560	2,500	49,400
M20	29,160	30,000	14,900	16,000	32,950	2,500	64,400
M22	31,000	32,000	16,900	18,000	35,030	2,500	79,000
M24	35,000	36,000	17,700	19,000	39,550	3,000	110,000
M27	40,000	41,000	20,700	22,000	45,200	3,000	165,000
M30	45,000	46,000	22,700	24,000	50,850	3,500	223,000
M33	49,000	50,000	24,700	26,000	55,370	3,500	288,000
M36	53,800	55,000	27,400	29,000	60,790	4,000	393,000
M39	58,800	60,000	29,400	31,000	66,440	4,000	502,000
M42	63,100	65,000	32,400	34,000	71,300	4,500	652,000
M45	68,100	70,000	34,400	36,000	76,950	4,500	800,000
M48	73,100	75,000	36,400	38,000	82,600	5,000	977,000
M52	78,100	80,000	40,400	42,000	88,250	5,000	1220,000
M56	82,800	85,000	43,400	45,000	93,560	5,500	1420,000
M60	87,800	90,000	46,400	48,000	99,210	5,500	1690,000
M64	92,800	95,000	49,100	51,000	104,860	6,000	1980,000
M68	97,800	100,000	52,100	54,000	110,510	6,000	2300,000
M72P6	102,800	105,000	56,100	58,000	116,160	6,000	2670,000
M76P6	107,800	110,000	59,100	61,000	121,810	6,000	3040,000
M80P6	112,800	115,000	62,100	64,000	127,460	6,000	3440,000

d	s min	s max	m min	m max	e min	pitch	gr
M8x1	12,730	13,000	6,140	6,500	14,380	1,000	5,300
M10x1	16,730	17,000	7,640	8,000	18,900	1,000	11,400
M10x1,25	16,730	17,000	7,640	8,000	18,900	1,250	11,400
M12x1,25	18,670	19,000	9,640	10,000	21,100	1,250	17,000
M12x1,5	18,670	19,000	9,640	10,000	21,100	1,500	17,000
M14x1,5	21,670	22,000	10,300	11,000	24,490	1,500	24,500
M16x1,5	23,670	24,000	12,300	13,000	26,730	1,500	32,600
M18x1,5	26,160	27,000	14,300	15,000	29,560	1,500	47,200
M20x1,5	29,160	30,000	14,900	16,000	32,950	1,500	62,300
M22x1,5	31,000	32,000	16,900	18,000	35,030	1,500	79,000
M24x2	35,000	36,000	17,700	19,000	39,550	2,000	106,000
M27x2	40,000	41,000	20,700	22,000	45,200	2,000	161,000
M30x2	45,000	46,000	22,700	24,000	50,850	2,000	221,000
M33x2	49,000	50,000	24,700	26,000	55,370	2,000	279,000
M36x3	53,800	55,000	27,400	29,000	60,790	3,000	387,000
M39x3	58,800	60,000	29,400	31,000	66,440	3,000	492,000
M42x3	63,100	65,000	32,400	34,000	72,090	3,000	660,000
M45x3	68,100	70,000	34,400	36,000	76,950	3,000	810,000
M48x3	73,100	75,000	36,400	38,000	82,600	3,000	980,000
M52x3	78,100	80,000	40,400	42,000	88,250	3,000	1230,000
M56x4	82,800	85,000	43,400	45,000	93,560	4,000	1430,000
M60x4	87,800	90,000	46,400	48,000	99,210	4,000	1700,000

Değerler milimetre olarak verilmiştir. Values are given in millimeters. Werte sind in millimetern angegeben.