UNF - UNC ANSI B 18.2.2 ALTIKÖŞE SOMUN

UNF HEXAGONAL NUTS | **UNF-MUTTERN**

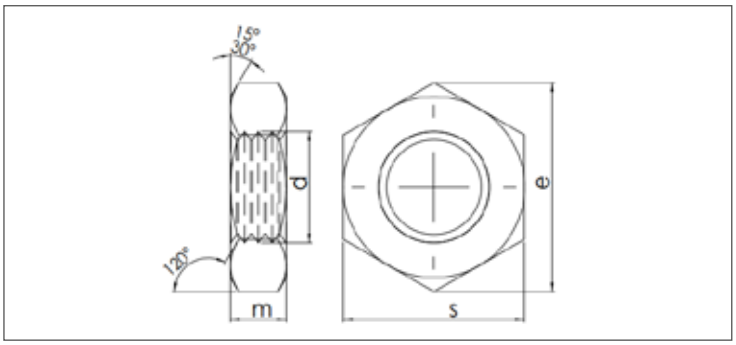

ISO	UNI	DIN (ASME)
-	-	B.18.2.2
Mekanik Özellikler - Toleranslar *Mechanical Properties - Tolerances* *Mechanische Eigenschaften - Toleranzen*		DIN 267 (ASTM A563) UNI 3740-4

TEKNiK BiLGiLER | **TECHNICAL INFORMATIONS** | **TECHNISCHE INFORMATION**

d	thread pitch x inch		s		s		m		gr
inches	UNF	UNC	min	max	min	max	min	max	
1/4"	28	20	0,428	0,438	0,488	0,505	0,212	0,226	3,320
5/16"	24	18	0,500	0,489	0,557	0,577	0,258	0,273	4,980
3/8"	24	16	0,562	0,551	0,628	0,650	0,320	0,337	7,240
7/16"	20	14	0,688	0,675	0,768	0,794	0,365	0,385	12,900
1/2"	20	13	0,750	0,736	0,840	0,866	0,427	0,448	17,900
9/16"	18	12	0,875	0,861	0,982	1,010	0,473	0,496	26,400
5/8"	18	11	0,938	0,922	1,051	1,083	0,535	0,559	33,200
3/4"	16	10	1,125	1,088	1,240	1,299	0,617	0,665	53,900
7/8"	14	9	1,312	1,269	1,447	1,516	0,724	0,776	86,100
1"	12	8	1,500	1,450	1,653	1,732	0,831	0,887	128,000
1" 1/8	12	7	1,688	1,631	1,859	1,949	0,939	0,999	267,600
1" 1/4	12	7	1,875	1,812	2,066	2,165	1,030	1,094	358,300
1" 1/2	12	6	2,250	2,175	2,480	2,598	1,245	1,317	594,200