TABLALI SOMUN

T NUT **BUNDMUTTER**

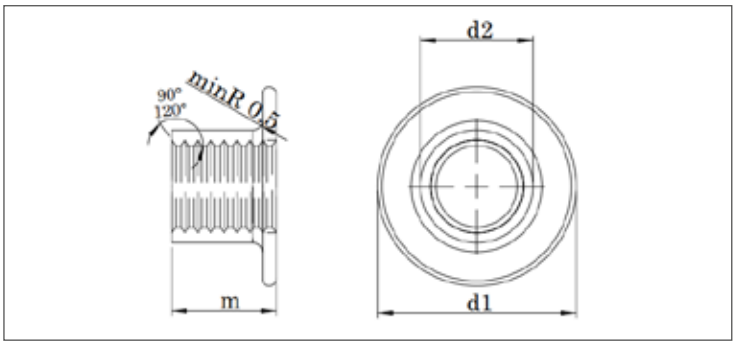

ISO	UNI	DIN
-	-	-
Mekanik Özellikler - Toleranslar *Mechanical Properties - Tolerances* *Mechanische Eigenschaften - Toleranzen*		**DIN 267** **UNI 3740-4** **ISO 4759-1**

TEKNiK BiLGiLER **TECHNICAL INFORMATIONS** **TECHNISCHE INFORMATION**

d	p (5)	d1 min (2)	d1 max (2)	d2 min (4)	d2 max (4)	m min (1)	m max (1)	kg
M6	1,00	18,50	19,00	8,00	8,20	7,60	8,00	4,27
M8	1,25	21,20	21,50	9,75	10,00	9,75	10,00	6,87
M10	1,50	21,30	21,70	11,75	12,00	10,75	11,00	7,93
3/8 UNC	16,00	21,30	21,70	11,75	12,00	10,75	11,00	8,41
5/16 UNC	18,00	21,20	21,50	9,75	10,00	9,75	10,00	7,10